YARP Plugins for Gazebo Simulator: development and application on the iCub and COMAN robots

Alessio Rocchi

Enrico Mingo Hoffman, Silvio Traversaro, Mirko Ferrati, Alessandro Settimi, Francesco Romano
Lorenzo Natale, Antonio Bicchi, Francesco Nori, Nikos G. Tsagarakis

Humanoids'14

18 November 2014, Madrid

The WALK-MAN Project

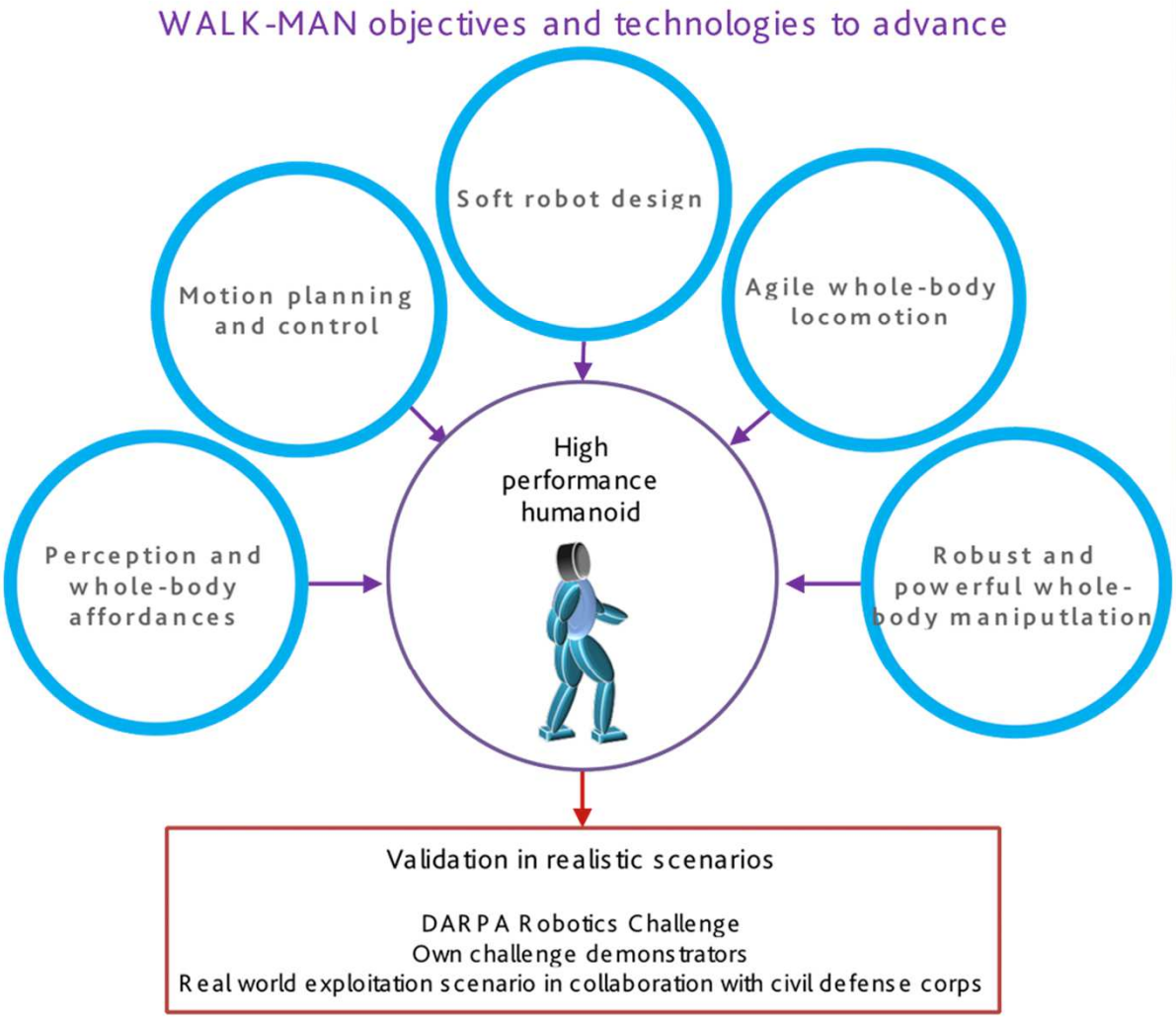

Walkman ..and friends

other European projects directly working or contributing to the Gazebo and YARP ecosystem:

CODYCO

KOROIBOT

SoftHands

A Theory of Soft Synergies for a New Generation of Artificial Hands

WALK-MAN SIMULATOR: Motivation

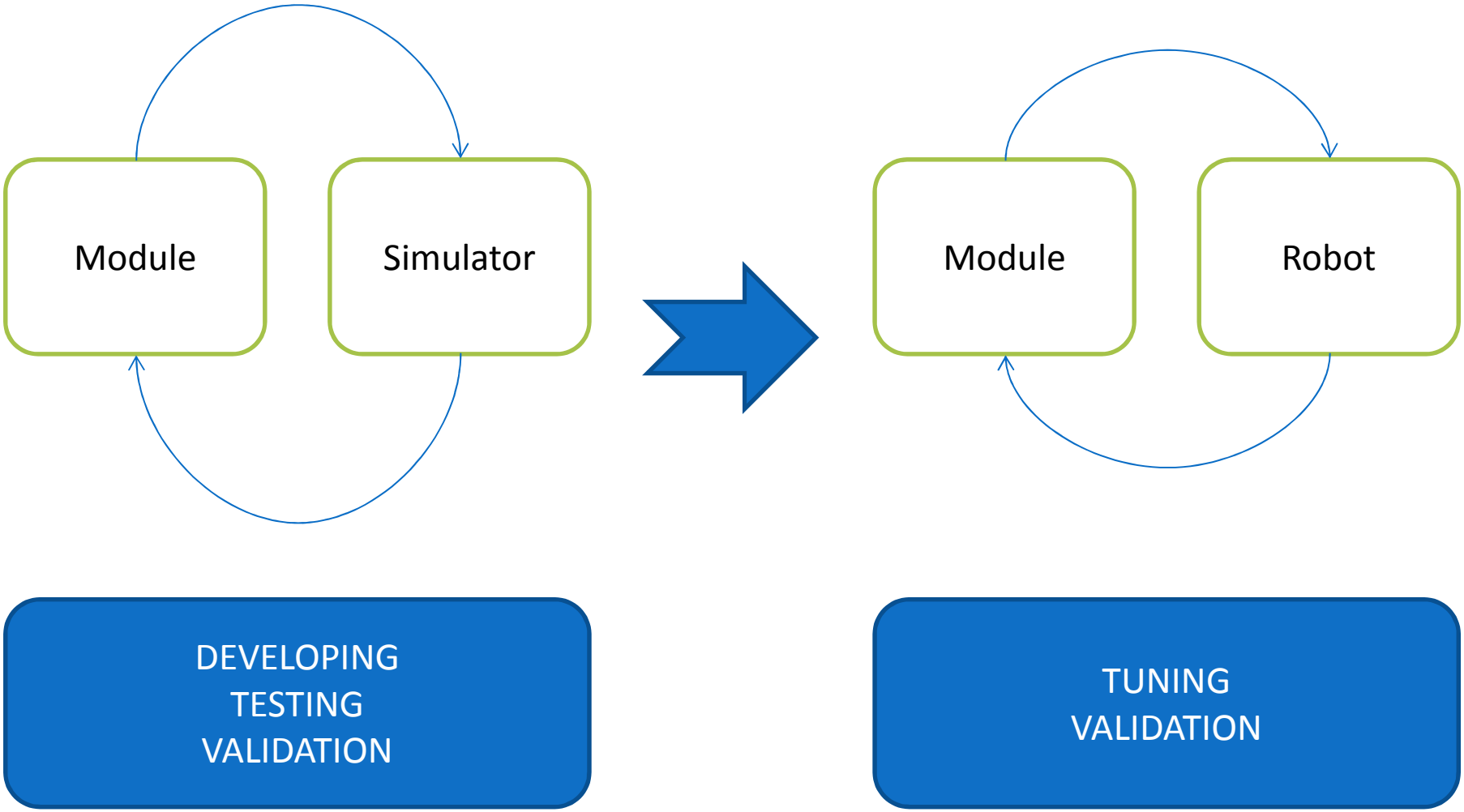

ROBOTICS SIMULATORS

OpenRAVE

Webots™ 7

fast prototyping and simulation of mobile robots

OpenHRP

GAZEBO

v-rep

virtual robot experimentation platform

GAZEBO

- **Easy to use**
- **Simulates sensors**
  - IMU, Cameras, RGB-D, …
- **Expandable through plugins**
- **Different Dynamics Engines**
  - ODE, Bullet, DART, SimBody
- **Open-Source**
- **Large and active community**
  - OSRF, DARPA

gazebo_yarp_plugins

gazebo_yarp_plugins

GAZEBO

Interaction between YARP modules and Gazebo

- Interfaces: sensors, actuators...

Open-Source

- https://github.com/robotology/gazebo_yarp_plugins

E. Mingo Hoffman, S. Traversaro, A. Rocchi, A. Settimi, F. Romano, L. Natale, A. Bicchi, F. Nori and N. G. Tsagarakis, **"Yarp Based Plugins for Gazebo Simulator"**, in *2014 Modelling and Simulation for Autonomous Systems Workshop (MESAS)*, Roma, Italy, 5 -6 May 2014

gazebo_yarp_plugins & robotInterface

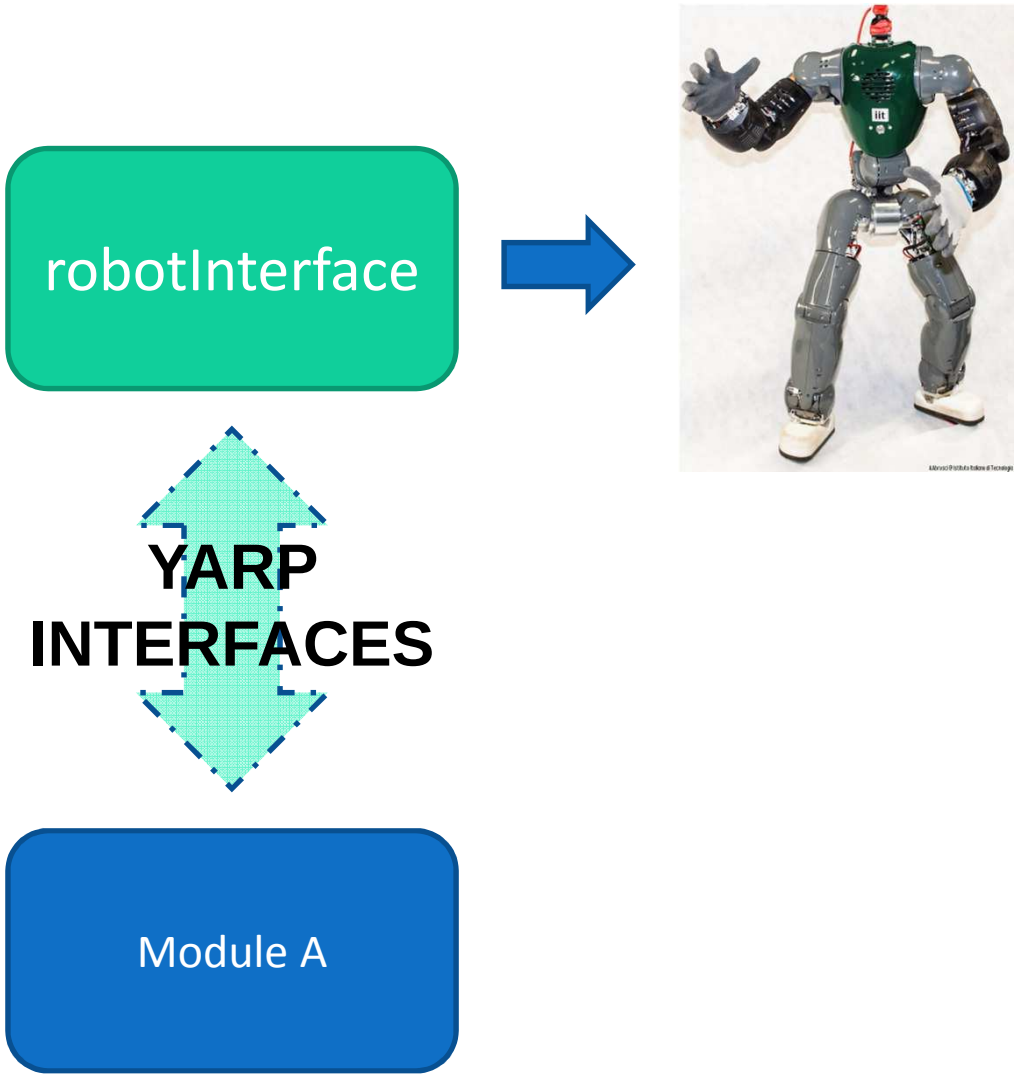

gazebo_yarp_plugins & robotInterface

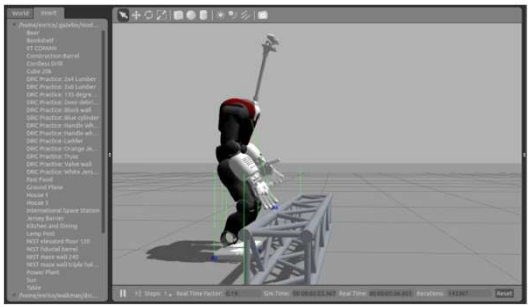

gazebo_yarp_ plugins

YARP INTERFACES

Module A

gazebo_yarp_plugins

GAZEBO

Gazebo Plugin

- World, Model, Sensor and System

YARP Device Drivers

- Control Interfaces, Sensor Interfaces, …

Control Board Plugin

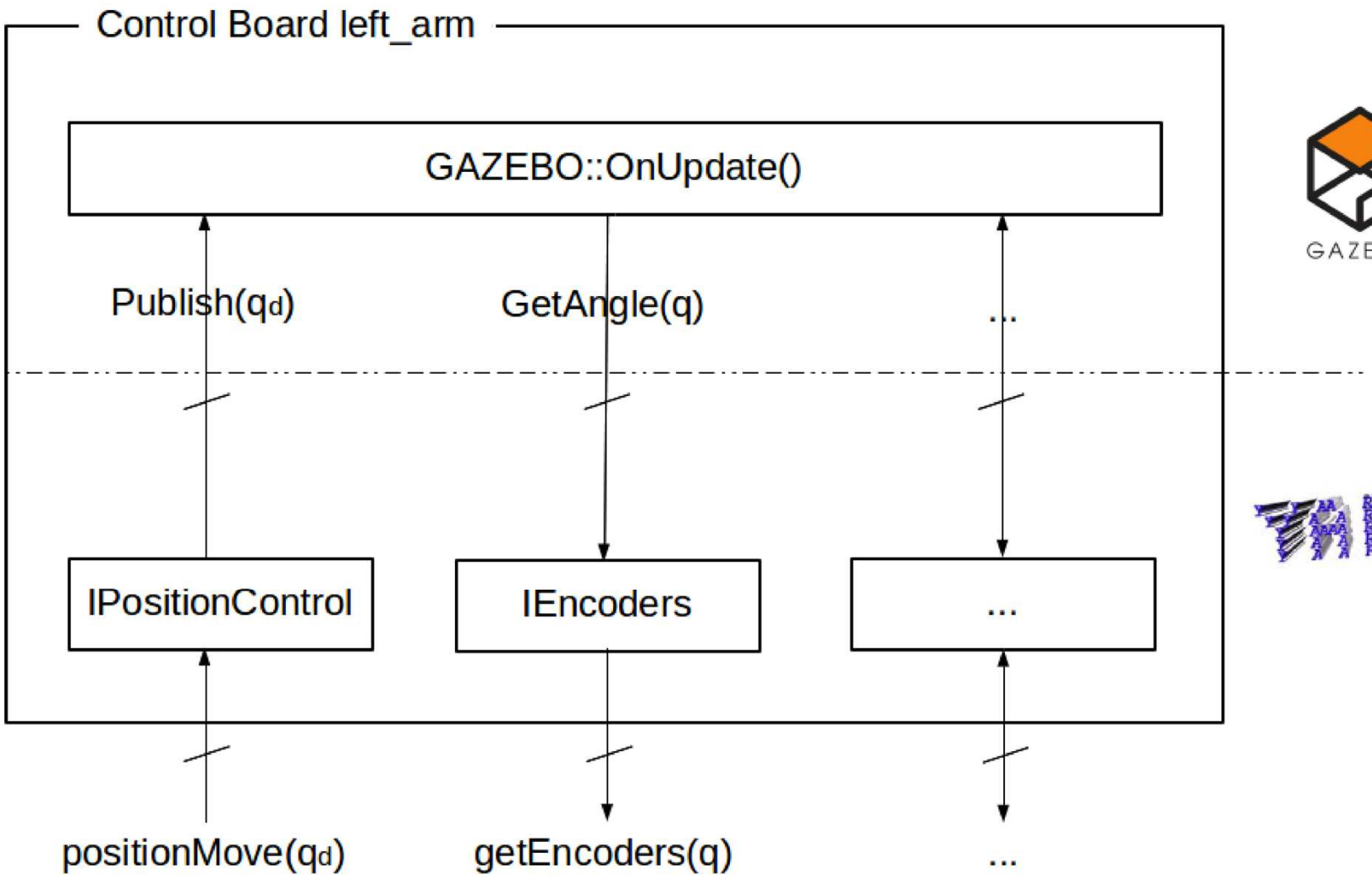

Sensors

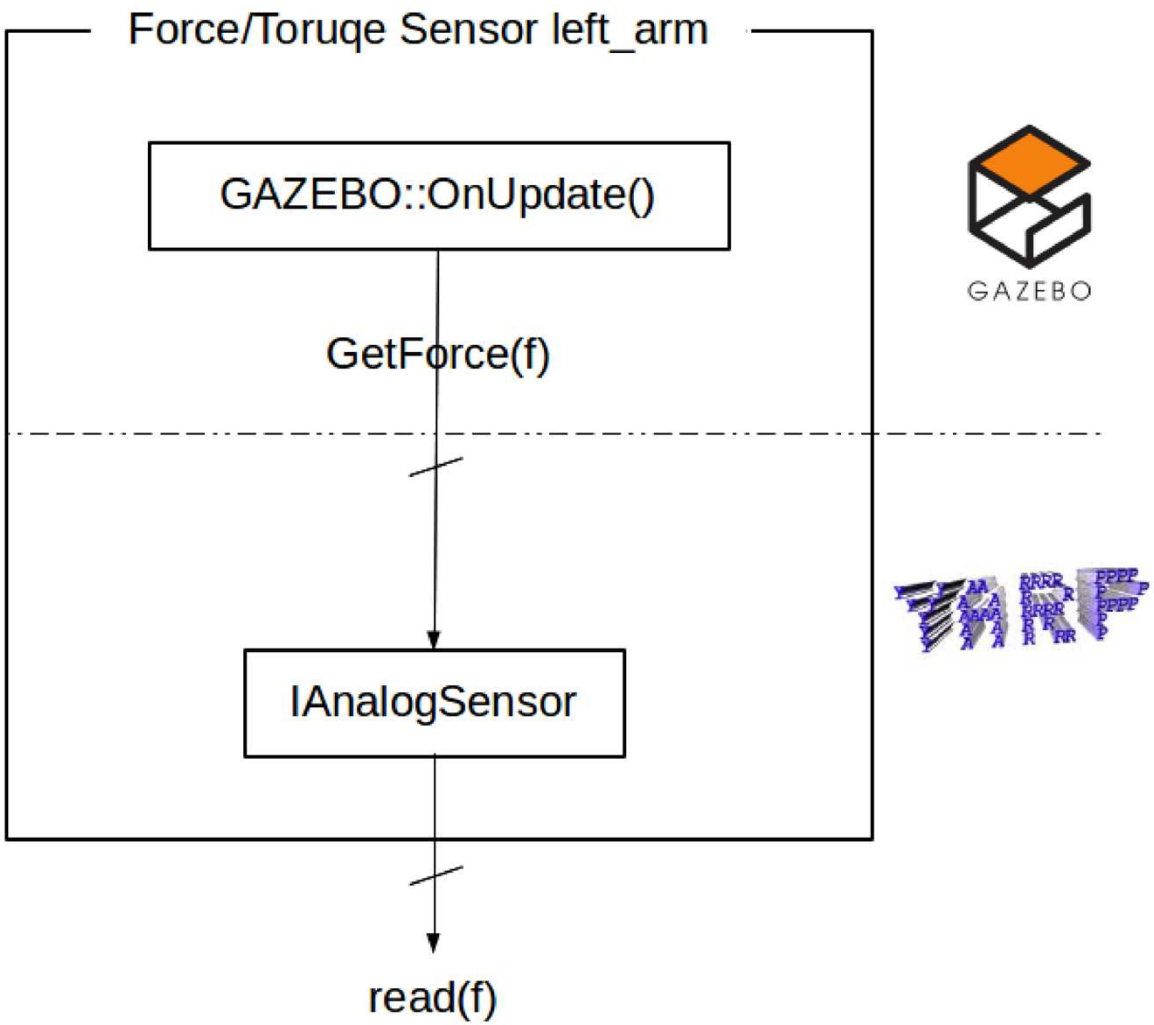
Force/Toruqe Sensor left_arm
GAZEBO::OnUpdate()
GetForce(f)
IAnalogSensor
read(f)
GAZEBO

gazebo_yarp_plugins

Control Board Plugin

- position, velocity, torque...

Force/Torque sensor plugin

IMU plugin

Camera plugin

Apply External Wrench

Clock Synchronization Plugin

- Simulation clock vs wall clock – simulated real-time@1kHz (even on slow computers :P)

Clock Sync.

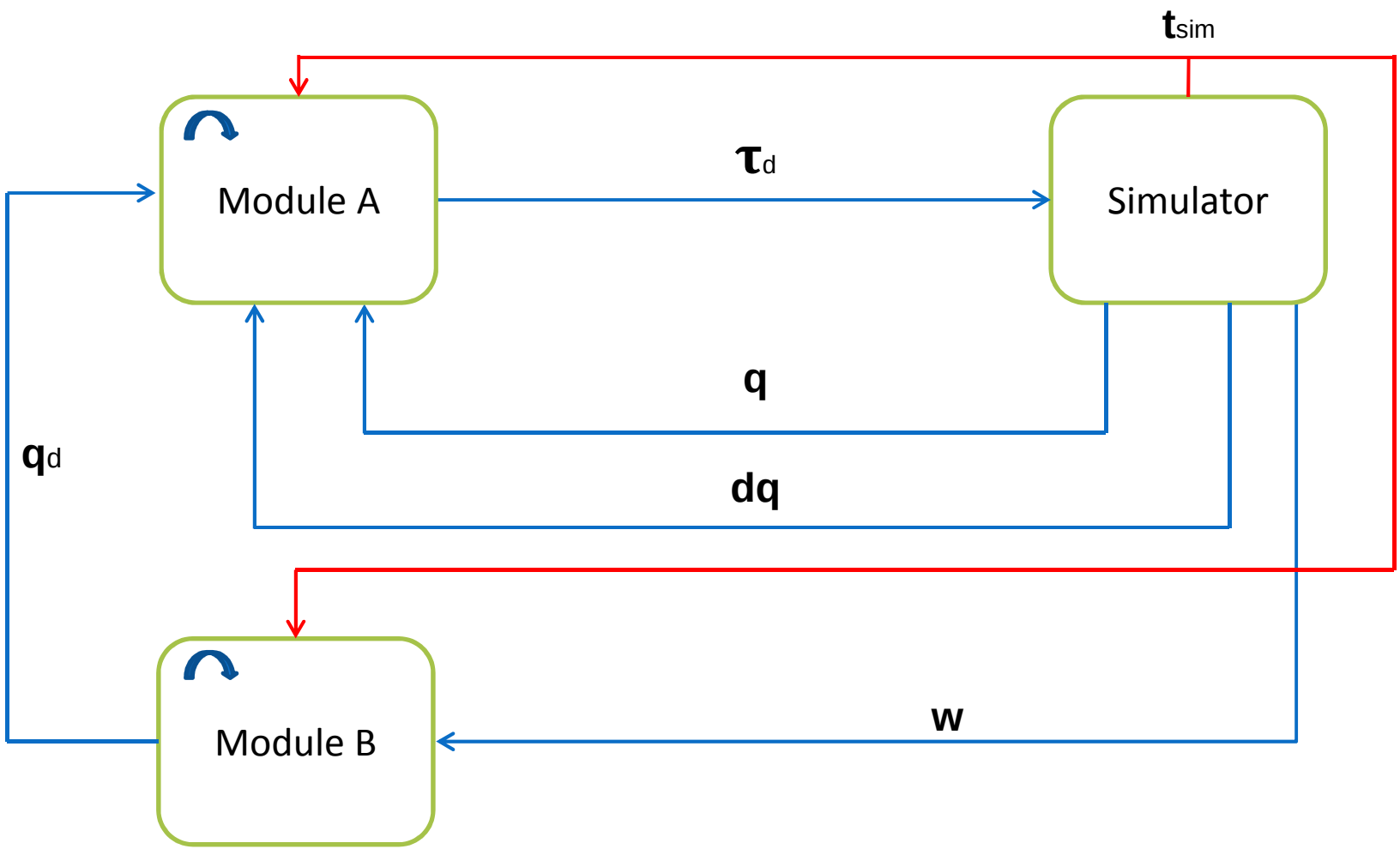

XACRO, URDF, SRDF & SDF

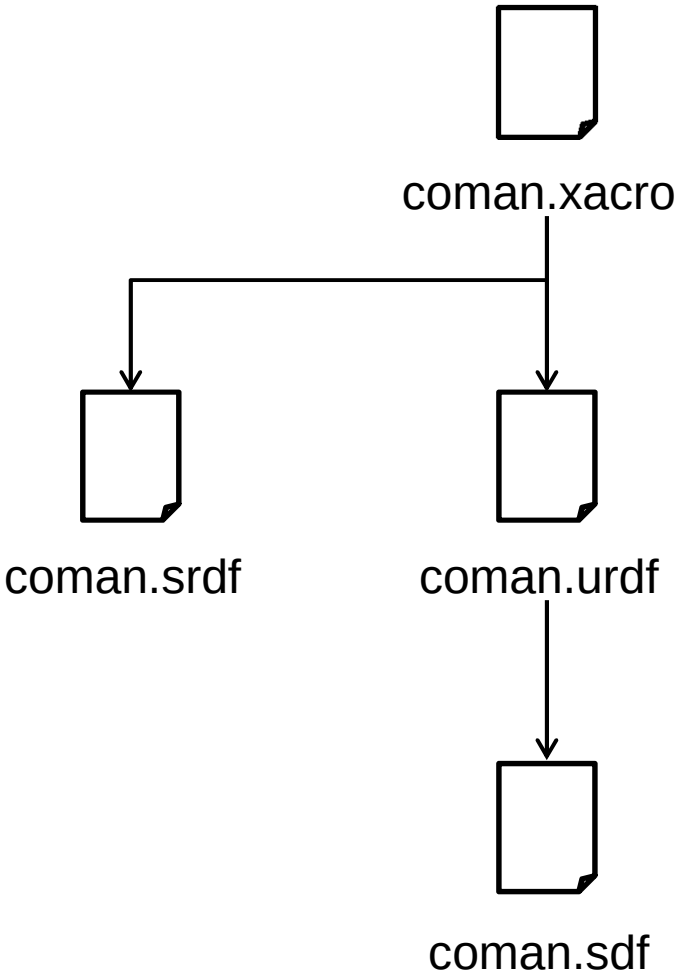

- **Visualization – Status Monitoring** (Forward Kinematics)
- **Control** (Inverse Kinematics/Inverse Dynamics)
- **Simulation** (Forward Dynamics)
- **Tool** (Automatic Conversion from CAD, output format of identification..)

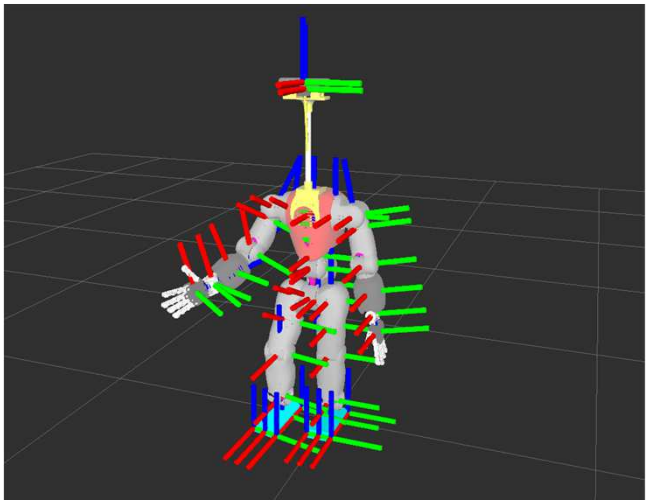

XACRO, URDF, SRDF & SDF

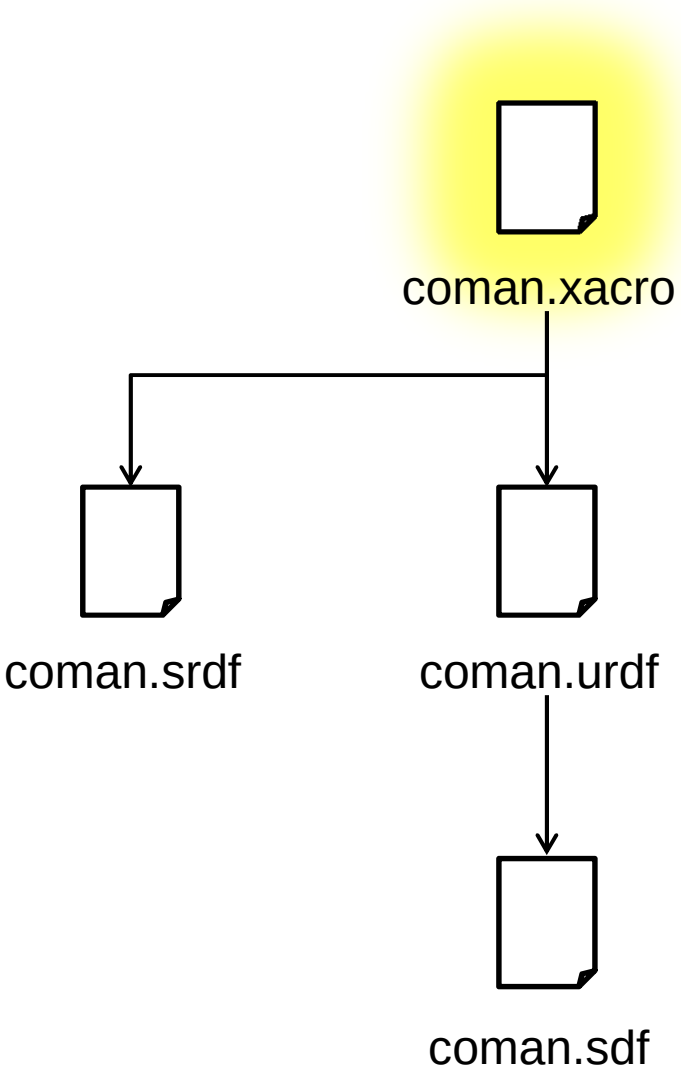

XACRO

```
...
<xacro:if value="${GAZEBO_COMAN_USES_XTION}">
<link name ="Xtion_body">
   <inertial>
     <origin xyz="0.047 0.0 0.40" rpy="0 0 0"/>
     <mass value="0.39"/>
     <inertia ixx="0.01" ixy="3.34E-7" ixz="-2.66E-4" iyy="0.009"
iyz="1.97E-6" izz="5.1E-4" />
   </inertial>
   <visual>
     <origin xyz="-0.020281504 0.0 -0.68662053" rpy="0 0 -
3.14159265359"/>
     <geometry name="Xtion_body_visual">
       <mesh
filename="package://coman_urdf/meshes/collada/Xtion/xtion_base.d
ae" scale="0.03937 0.03937 0.03937" />
     </geometry>
   </visual>
   <collision>
     <origin xyz="-0.020281504 0.0 -0.68662053" rpy="0 0 -
3.14159265359"/>
     <geometry name="Xtion_body_collision">
       <mesh
filename="package://coman_urdf/meshes/collada/simple/Xtion/xtion_
base.stl" scale="0.03937 0.03937 0.03937" />
     </geometry>
   </collision>
  </link>
...
```

XACRO, URDF, SRDF & SDF

Universal Robotic Description Format

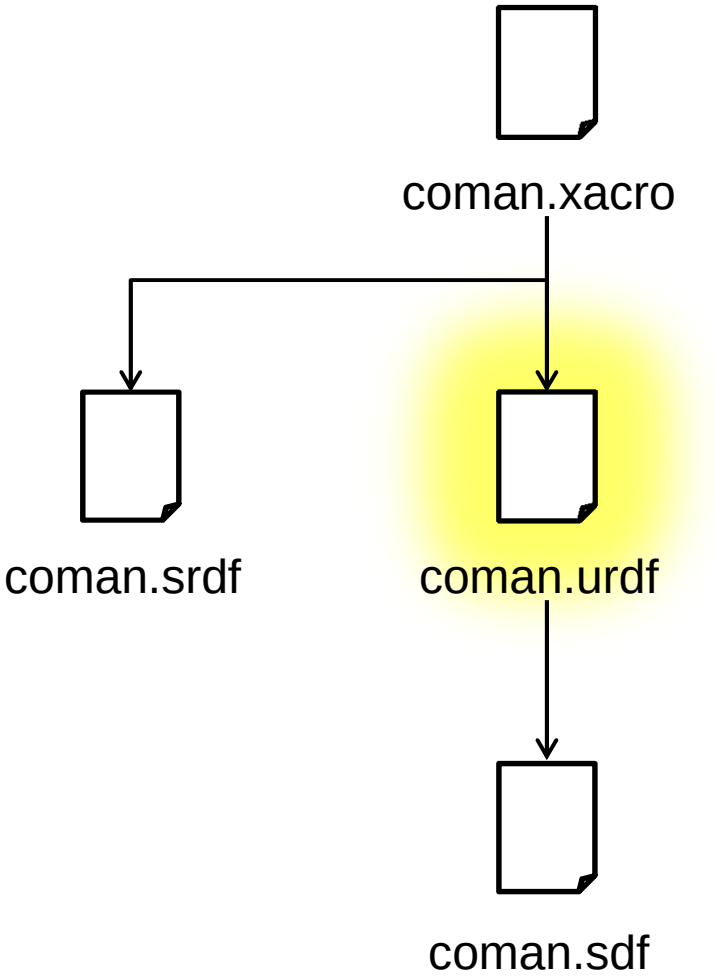

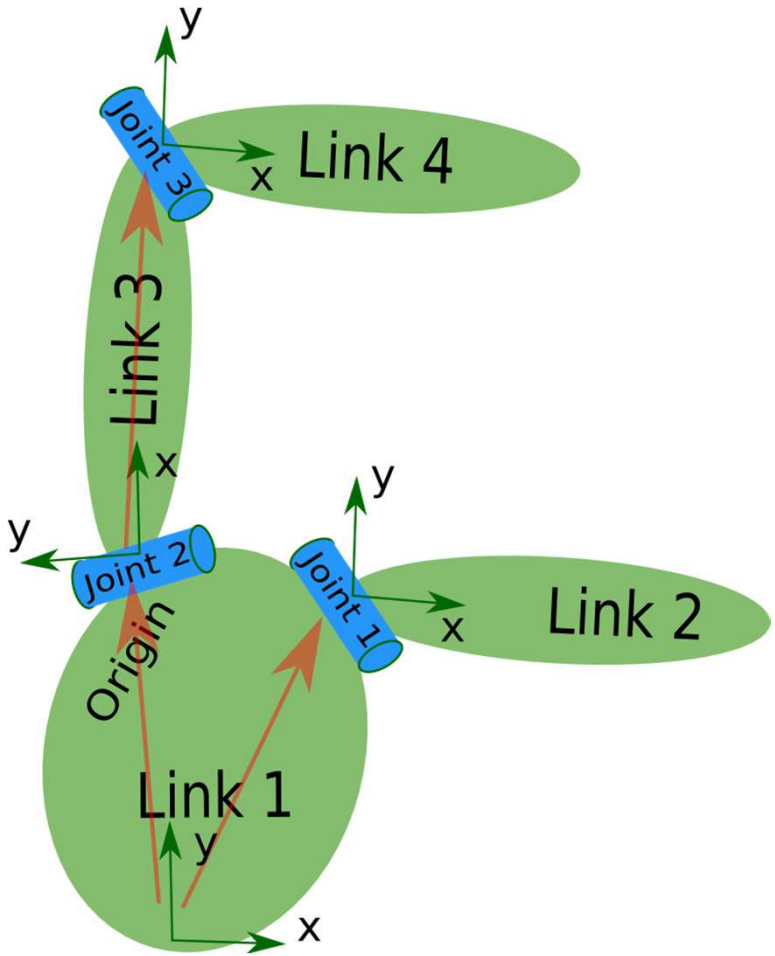

XACRO, URDF, SRDF & SDF

Semantic Robot Description Format

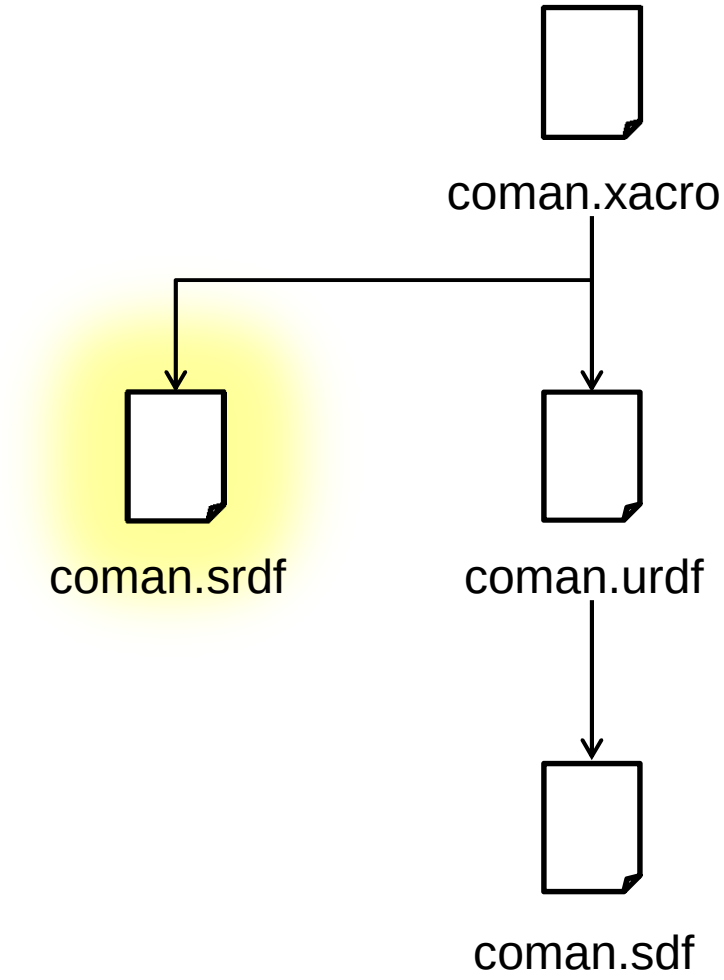

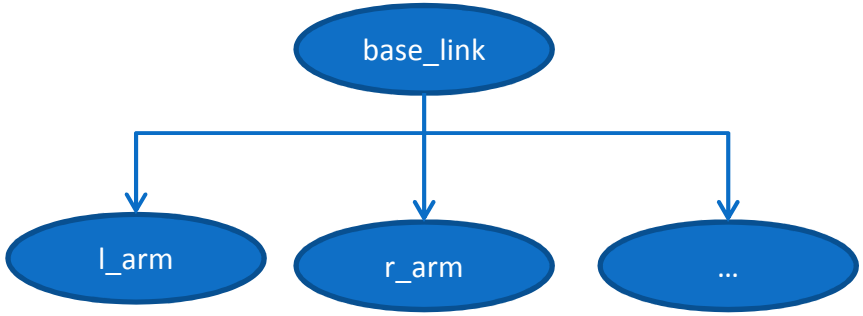

- LPitchSh
- LRollSh
- LYawSh
- LPitchElb
- …

- RPitchSh
- RRollSh
- RYawSh
- RPitchElb
- …

- …

- Link Collisions
- Homing Configurations
- …

XACRO, URDF, SRDF & SDF

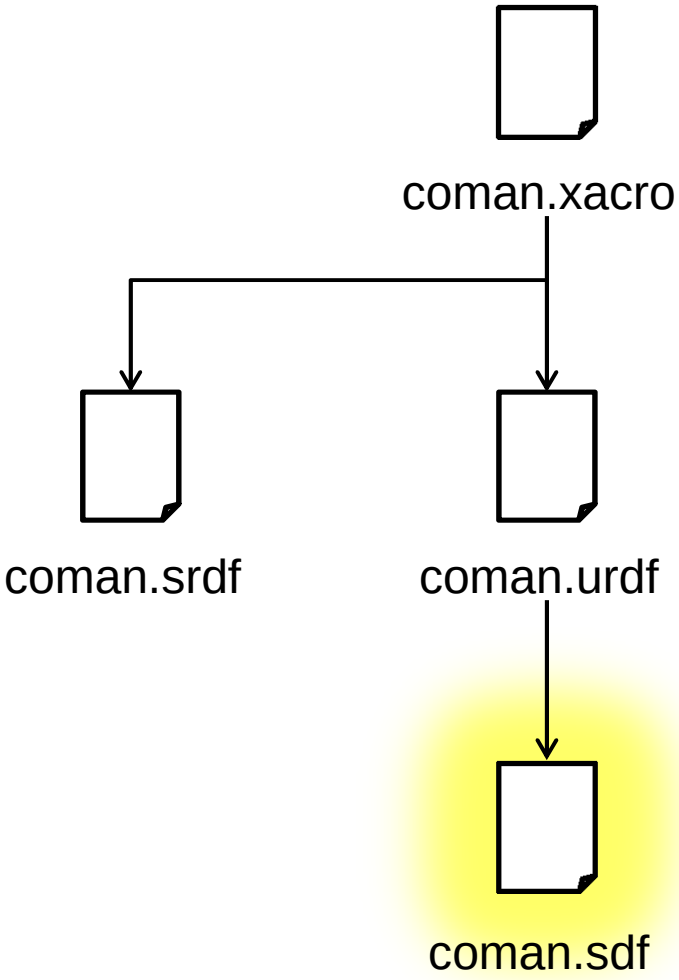

Simulation Description Format

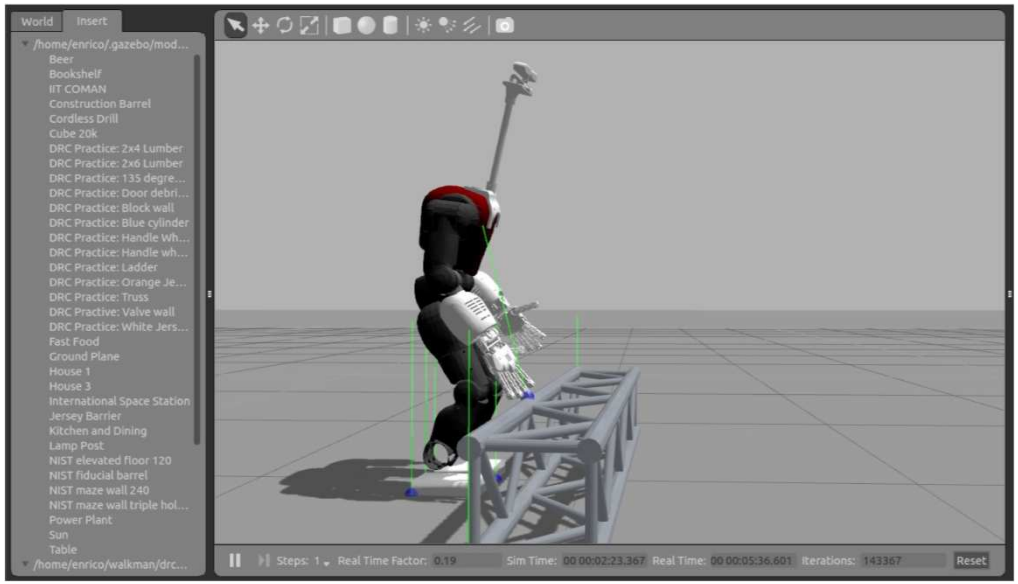

- Loaded Plugins
- Sensors
- …

Simulation Description Format (SDF)

```
...
 <plugin filename="libgazebo_yarp_controlboard.so" name="coman_yarp_gazebo_plugin_torso">
  <yarpConfigurationFile>
   model://coman_urdf/conf/coman/coman_gazebo_torso.ini
  </yarpConfigurationFile>
  <initialConfiguration>
   0.0 0.0 0.0
  </initialConfiguration>
 </plugin>
 <plugin filename="libgazebo_yarp_jointsensors.so" name="coman_yarp_gazebo_plugin_torso_speed">
  <yarpConfigurationFile>
   model://coman_urdf/conf/coman/coman_gazebo_torso_speed.ini
  </yarpConfigurationFile>
 </plugin>
...
```

COMAN & iCub Models

- https://github.com/EnricoMingo/iit-coman-ros-pkg
- https://github.com/robotology-playground/icub_gazebo

Robotology Superbuild

- https://github.com/robotology-playground/robotology-superbuild

YARP controllers in Gazebo: from simulation to execution

[redacted]

[redacted]

[redacted]

YARP controllers in Gazebo: from simulation to execution

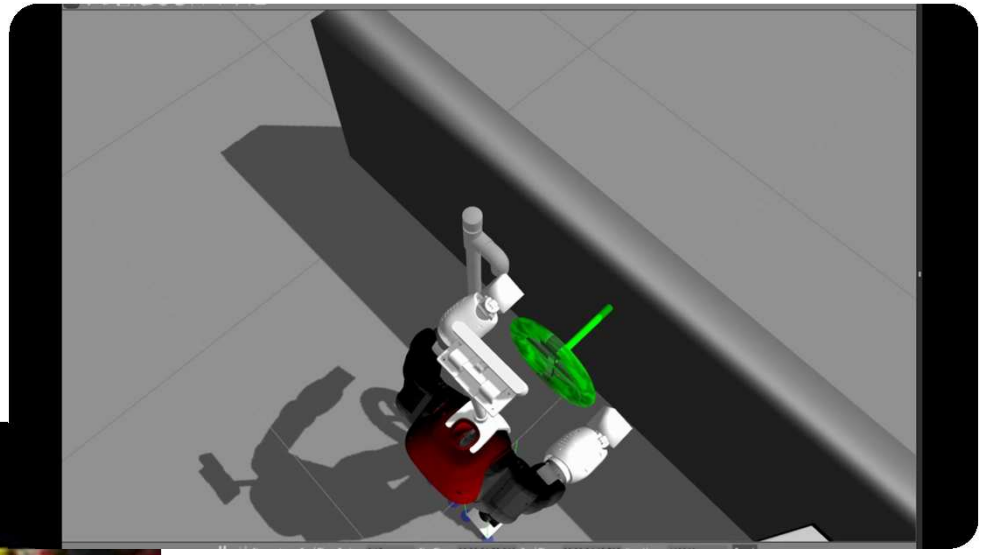

Thanks for your attention!